JOHN S. MONTUORI
The Perkin-Elmer Corporation
Danbury, CT 06810

Image Scanner Technology*

An evaluation of image scanning technologies with respect to requirements for digital mapping systems.

ABSTRACT: *Three classes of scanners—electronic, electro-optical, and solid-state—are evaluated against a hypothetical set of requirements for a digital mapping system. Certain requirements are dictated by the operating environment, i.e., whether the scanner will be used for production or research, and whether it will be used on an on-line, interactive, or off-line system. Other requirements are dictated by the specific scanner application intended, of which there are currently three major ones: stereo photogrammetry, feature extraction, and feature positioning.*

The various mapping requirements are best met with different operating modes. Some require a full format, whereas a smaller "window" scanning mode suffices for others. In some cases, an interactive capability would be beneficial; in others, batch processing is better. The critical requirements imposed on an image scanner for digital mapping applications are resolution (in total number of elements per viewing area), uniformity of performance over area, geometric accuracy, and speed. Systems adaptable to all these requirements include drum-type laser scanners, rotating-mirror laser scanners, and solid-state scanners comprised of a series of optically butted linear arrays. Before the most appropriate technology can be selected and a system design recommended, the application scenario and intended environment must be known and resulting requirements must be carefully evaluated and ranked.

INTRODUCTION

THE STEADILY INCREASING data requirements imposed on the mapping community are forcing the development of automatic systems for map production. Emphasis is on both speed and accuracy, and especially on the reduction of the labor-intensive parts of the map-making process. Because much of the map data is derived from aerial photographs, a system to rapidly convert these sources into the proper digital data form is becoming necessary.

The magnetic storage required for a typical medium-to-high-resolution photographic image in digital form is large (from 10^9 to 10^{10} bits, or more). Therefore, it is not now a practical medium for the archival storage of many images. A viable alternative to digitizing and storing entire frames of imagery is to scan, digitize, and temporarily store the required sections of an image when and as required for digital processing. Using this alternative eliminates the need for a large permanent magnetic storage since the image stored in photographic form serves as a massive read-only memory.

In order to convert pictorial data to digital form, an analog signal related to the transmissive variations in an image on film must be generated. The analog signal is then sampled and quantized into discrete digital

---

* Presented at the ACSM-ASP Fall Convention, Albuquerque, New Mexico, 15-20 October 1978. An earlier version appeared in the Perkin-Elmer publication, *Tech News*.

PHOTOGRAMMETRIC ENGINEERING AND REMOTE SENSING,
Vol. 46, No. 1, January 1980, pp. 49-61.

numbers for use as computer input. There are several alternative approaches to the implementation of this conversion process, including microdensitometers, laser scanners, flying spot scanners, solid-state array scanners, and vidicon scanners. Each has its own capabilities and limitations, which should be considered with regard to the task that must be performed.

The trade-offs among them include speed, resolution, accuracy (both geometric and photometric) and cost. Optimization of the trade-offs depends on the application, and requires the prospective user to determine the relative importance of these parameters for his specific application. For example, mensuration precision may be required for precise location of details in a scene but, for many applications, exact positional information may be unimportant.

Speed requirements vary greatly; a production facility may require the digitization of large amounts of data in a day, while in a research and development application speed may not be considered important. Similarly, microdensitometers might be suited to off-line bulk conversion of film imagery to digital form with high accuracy and high resolution, but they may be too slow to support on-line utilization during interactive processing.

Solid-state scanners, with their parallel readout capabilities, are at the other end of the spectrum and are fast enough for interactive use. Between these are other alternatives representing various levels of conversion rates, metric performance, and constraints on the production process.

This article evaluates several different scanning technologies with respect to a hypothetical set of requirements for a digital mapping system. Functional and performance requirements for a scanning/digitizing system are discussed and various technologies are described and compared with respect to them.

FUNCTIONAL REQUIREMENTS

The three basic functions associated with any image scanner providing input to a digital mapping system are shown in Figure 1 and listed below.

- Digitize image areas, either selected areas within an input format or the entire format area.
- Provide coordinate information that relates each pixel to all others, with regard to location in pixel space, and also relates pixel space to input image space.
- Output digital image and coordinate data directly to a using system or to some intermediate storage medium.

Figure 1 also shows a set of secondary functions that must be implemented in order to digitize image areas. The implementation and performance requirements associated with these functions, however, depend upon the specific uses intended for the digital output of the device as well as the manner in which the scanner itself is to be used, i.e., in a production or research and development (R&D) environment, and whether it will be used on-line, interactively, or off-line.

The on-line versus off-line versus interactive considerations mostly influence the im-

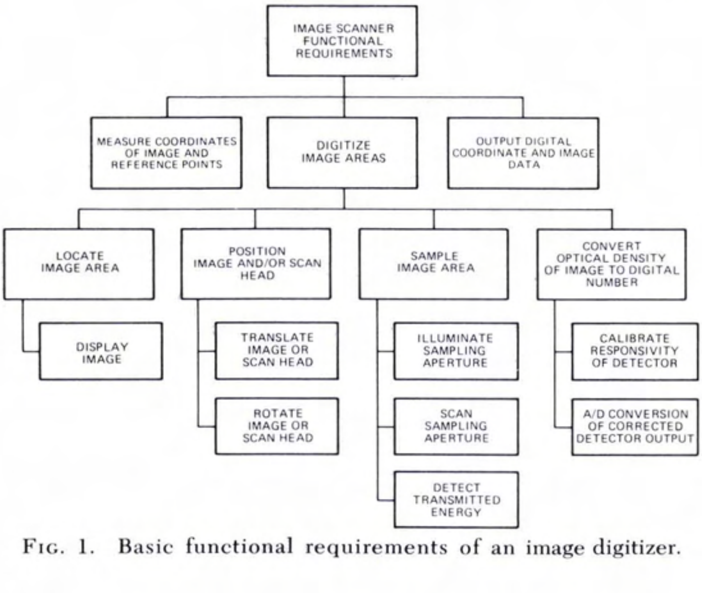

FIG. 1. Basic functional requirements of an image digitizer.

plementation requirements associated with the coordinate measurement and the output interface.

Speed, degree of automation, flexibility, and cost are features that vary in importance with the operational environment intended for the scanner; whereas resolution, geometric and photometric accuracies, and format accommodation are more application-dependent.

TYPICAL APPLICATIONS

Automatic digital data-processing techniques are being developed for three major applications associated with the mapping process:

- Stereo Photogrammetry—including contouring, determination of the elevation of discrete points, profiling, and the accurate determination of ground coordinates for discrete points from pairs of stereo images;
- Feature Extraction—involving the generation and maintenance of feature signature data bases via the analysis of texture and tonal information extracted from imagery, and the subsequent automatic feature classification via the analysis of texture and tonal information on a variety of input images and comparison with the feature signature data base; and
- Feature Positioning—including image rectification and orthorectification.

The requirements imposed on a scanner by each application differ, but taken collectively include a selected area window scanning as well as full format scanning capability; window rotation and orientation readout; variable resolution; measurement of reference point coordinates; geometric linearity and repeatability; photometric accuracy; high data rate; and, in some cases, an interactive capability.

TYPES OF SCANNERS

In all image digitizing systems, light transmitted or reflected from an illuminated image is projected onto a photosensitive surface which produces an electrical signal related to the variations in light intensity reaching that surface. The signal is then processed, sampled, and passed through an analog to digital (A/D) converter to quantize it and produce a digital bit stream.

For discussion purposes, scanners can be grouped into three classes based on either the technology used to illuminate the input or the method of detecting the energy transmitted by uniformly illuminated input. The three classes are referred to in Figure 2 as

- Electronic Scanners—which may use cathode ray tube (CRT) devices, vidicon type devices, or image dissector tubes;
- Electro-Optical Scanners—which may use lasers, light-emiting diodes, or conventional lamps as sources of illumination; and
- Solid-State Scanners—which may use charge-coupled devices (CCD's), charge injection devices (CID's), charge-coupled photodiode devices (CCPD's), or self-scanned photodiode devices (SSPD's).

These classes are further divided in Figure 2 according to the technology used to scan the sampling aperture over the area of the input to be digitized.

ELECTRONIC SCANNERS

The electronic scanners discussed in this paper use cathode ray tube devices, vidicon type tubes, or image dissector tubes as major elements of the systems.

The heart of the CRT-type scanner is the CRT. It serves as the source of illumination and at least part of the deflection subsystem.

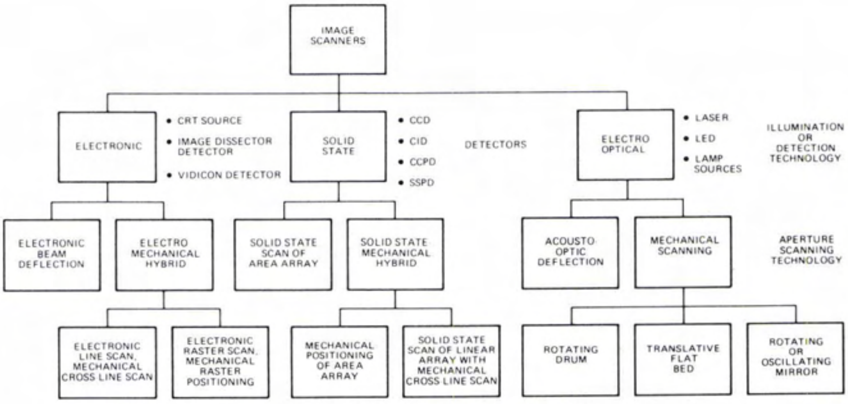

FIG. 2. Classification of image scanners by technology.

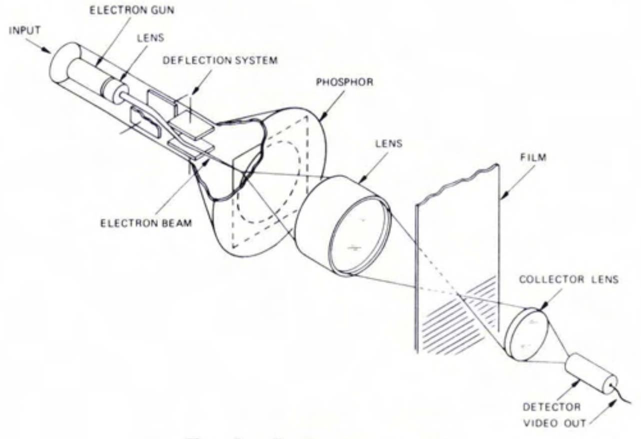

FIG. 3. Basic CRT scanner.

A photosensitive device for the detection subsystem is required to complete the basic elements of a CRT scanner (Figure 3).

The CRT is a vacuum tube in which a finely focused beam of electrons is made to impinge upon a light-emitting material (phosphor) deposited on the face of the tube. The beam is deflected across this phosphor by electrostatic or magnetic means in a manner determined by the waveforms supplied to the controlling device. The intensity of light emitted is proportional to the current in the electron beam, which is controlled by a separate electrical control.

Light emitted from the phosphor is then collected and focused onto the film to be scanned. Light passing through the film in the scanner is collected and focused on a photodetector, which converts the variations in transmitted light (density of film) into an electrical signal.

With regard to implementation options for the aperture scanning subsystem, CRT systems fall into either the all-electronic beam-deflection category, or the electromechanical hybrid category. The former requires a two-axis deflection system that can be used to scan a uniform matrix of spots (raster) or generate an irregular (random) scan under computer control. Two different hybrid scanning approaches (Figure 4) can be implemented with CRT systems:

- Mechanical stages providing motion along two orthogonal axes can be used to position the CRT with respect to the image format to be scanned, and two-axis electronic beam deflection can be used to generate the uniform matrix of sampling spots at the localized area; and
- Single-axis electronic beam deflection can be used to generate repetitively a scan line while cross-scan motion is provided by a linear-motion translating mechanical stage or a film transport.

An image dissector is a vacuum tube with one end, the photocathode, coated with a

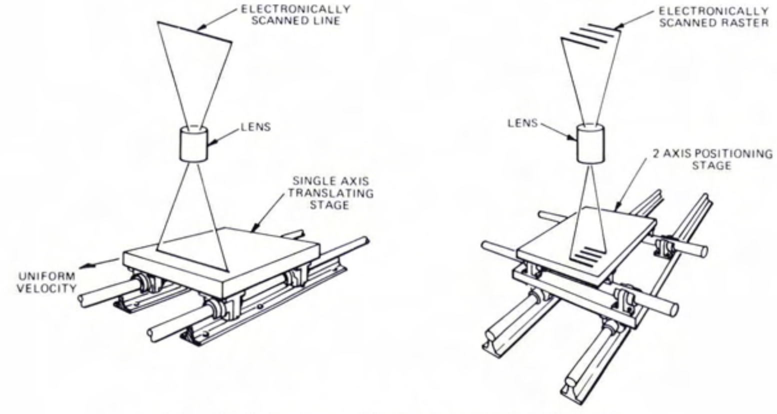

FIG. 4. Mechanical hybrid scanning designs.

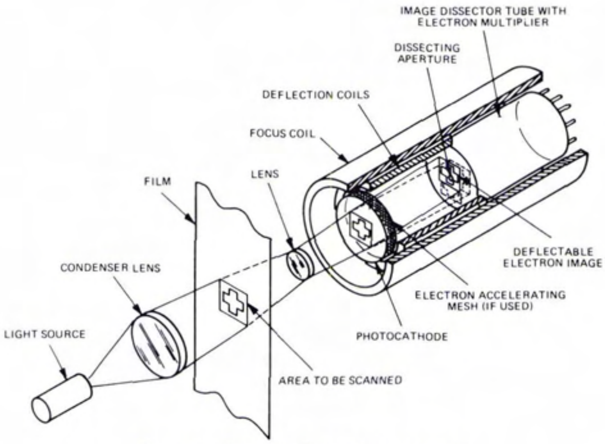

FIG. 5. Image dissector scanner.

material that converts incoming photons into electrons. It is a non-storage type of camera tube and does not employ a scanning beam. In reality, it is a photomultiplier with a small, electronically-movable photocathode area. The operating principles are illustrated in Figure 5.

An electron lens accelerates and focuses the electrons emitted from each point on the photocathode onto a corresponding point in the image plane containing the dissecting aperture. The resulting electron image is analogous to the image on film, because the current density at any area on the image plane will be proportional to the light intensity incident on the corresponding area of the photocathode. The entire electron image is electronically deflected or repositioned on the image plane to cause the selected part of the electron image to pass through the aperture at the center of the image plane.

Consequently, at any instant of time the aperture samples the electrons from a small, well-defined area of the input optical image incident on the photocathode. An electron multiplier behind the aperture multiplies only those electrons passing through the hole, and the resulting output signal emerges as a current in the output anode circuit. This output signal is converted to a digital number that is proportional to film transmittance at a specific sample point (pixel). Successive deflections, which can be digitally commanded through a D/A converter, produce digital values for additional pixels and may produce a raster scan pattern if desired. As is the case with CRT scanners, image dissectors can be used in scanners employing all-electronic deflection techniques or either of the hybrid techniques previously discussed.

In a vidicon system, the light reflected from or transmitted through an image on film impinges upon the photoconductive target of

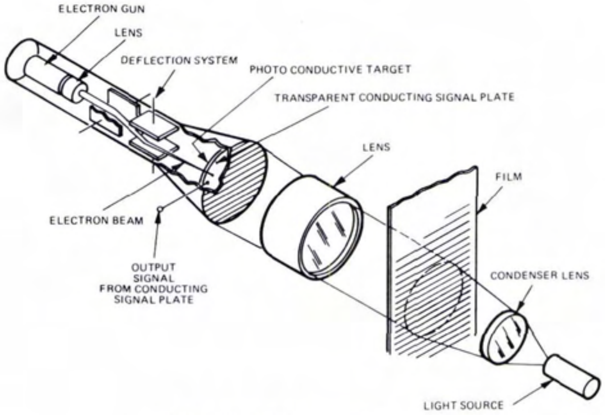

FIG. 6. Vidicon scanner.

the vidicon, as illustrated in Figure 6. The variation in the local charge concentration due to the image on the surface is converted into a video signal by repeatedly scanning the photoconductive surface with an electron beam.

A device of this type has an electron gun, which produces the electron beam, and a magnetic or electrostatic deflection mechanism for controlling the landing location of the beam on the target.

The target in a vidicon is a photoconductive mosaic deposited upon a transparent metal film (the signal plate). Light passes through the signal plate and strikes the photoconductive mosaic, changing its resistivity.

The signal electrode is operated at a positive voltage with respect to the back side of the photoconductor. When a light pattern is focused on the photoconductor, its conductivity increases in the illuminated areas, and the back side of the target changes to more positive values. The electron beam then reads the signal by depositing electrons on the positively charged areas, thereby providing a capacitively coupled signal at the signal electrode. This signal is transmitted through a video amplifier and signal conditioner to sampling and quantizing electronics.

As with other electronic scanners, vidicon systems can employ all-electronic deflection techniques or either of the hybrid deflection techniques previously discussed.

ELECTRO-OPTICAL SCANNERS

Electro-optical scanners utilize lasers, light-emitting diodes (LED's), and incandescent lamps as sources of illumination. Referring to Figure 2, they are grouped into two subcategories based on the means of implementing the scanning function:

- Acousto-optic beam deflection, and
- Mechanical scanning techniques

The latter category includes rotating drum scanners, translating flat-bed scanners such as microdensitometers, and rotating or oscillating mirror scanners.

Acousto-optic devices are very useful in laser scanning systems for a variety of functions. Of particular concern in this discussion are their deflection and focusing capabilities.

Since the angle at which an acousto-optic device deflects light is proportional to the frequency of the acoustical drive signal, it can be made to scan a beam by changing the frequency of the drive signal. This is usually accomplished by employing linearly swept FM signals. Consequently, scanning speeds are flexible, with the highest speeds determined by the acoustic propagation time through the cell. In general, single devices are limited to a one-dimensional scan, with between 1000 to 2000 resolvable spot diameters per line.

Higher resolutions have been achieved by employing a technique that incorporates two acousto-optic devices (a beam deflector working in series with an acoustic traveling-wave lens device). The acousto-optic deflector forms approximately 1000 spots, which are imaged onto the traveling-wave lens. This device is driven by an electronic pulse having the appropriate shape so as to cause the index-of-refraction variation in the acoustic media to approximate a thick lens, which reduces the spot size. The scanned laser beam from the first deflector is synchronized with the traveling-wave motion to scan the reduced spots.

One of the simplest mechanical scanner configurations uses a rotating drum. In the configuration illustrated in Figure 7, the light source is focused by a high-quality

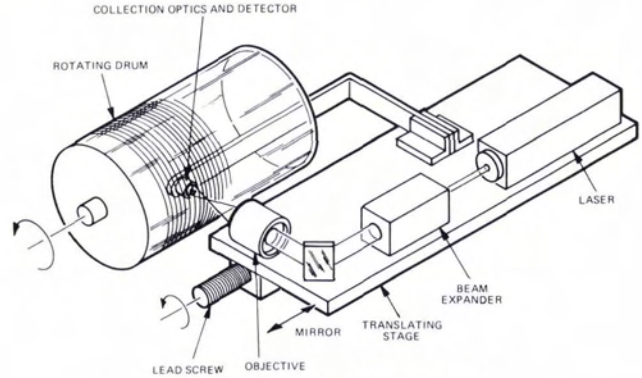

FIG. 7. Rotating drum scanner.

lens, such as a microscope objective, onto the material to be scanned or exposed and the film is mounted on the outside of a transparent drum which rotates about its axis. Scan in one direction is accomplished by rotating the drum under the focused beam. Scan in the other direction is accomplished by translation of the light source/lens parallel to the axis of the drum, or by translation of the rotating drum.

The drum scanner can provide high resolution scanning over large formats. Since there is no requirement to deflect the beam from the optical axis of its optical system, ultimate spot size is limited only by the wavelength of the source and the quality of the optics used. The major limitation of this type system is the data rate that can be handled while trying to accurately control speed and dimensional stability.

Flat-bed systems are usually slower than rotating drum systems; however, they have the added flexibility of accommodating glass plates, roll film, and cut film, and can operate at very small raster increments (down to 1 micrometre or less) because of the flat image plane and slow rates. A flat-bed scanner usually has a stationary optical system through which the image plane is moved on two orthogonal stages. The film is mounted on a precise flat glass platen in this plane. Matched illumination and scanning optics provide optimum illumination and measurement accuracy. Major advantages of flat-bed systems are high positional accuracy (within a few micrometres over several inches), and excellent resolution (typically several hundred lines per millimetre).

Mirror systems utilize either a rotating, multifaceted mirror or an oscillating flat mirror to move a light beam across a film sample. The transmitted or reflected light is focused onto a photomultiplier and the output signal is amplified, sampled, and digitized. The light source may be either coherent or incoherent; however, for high-speed, high-resolution applications, the coherent illumination from a laser source is usually preferred.

Mirror scanners can be separated by types into the following groups:

- Self-Resonant—Operates at a fixed frequency but can be varied in amplitude;
- Variable Frequency—Follows an analog input and can be controlled in both frequency and amplitude; and
- Rotating Polygons—Scans through a fixed angle and, because of high inertia, can be changed in frequency only at relatively slow rates.

Torsion rod and taut band devices constitute the self-resonant class. Both are excited electro-magnetically and scan symmetrically about their static positions. Devices in the "variable frequency" category include those with galvanometer movements and those using the piezoelectric phenomenon to obtain motion. Being analog devices, controllable both in frequency and position, they offer virtually unlimited operating modes, including holding a fixed position and scanning any sector either symmetrically about the center or over any selected portion of travel.

Piezoelectric devices have been made in a variety of configurations. One such is composed of two wafers of ceramic material, bounded into a biomorphic unit in a cantilever mount, with a mirror affixed so that its rotation axis coincides with the midpoint of the bending elements. The wafers are arranged so that, when opposing electrical fields are applied, the piezoelectric effect causes one to expand and the other to contract, bending the assembly and so moving the mirror. Motion is proportional to the voltage applied.

Rotating polygons (spinners) constitute the third class. They can be driven by any type of motor, including air turbines for high speeds. These units offer a great variety of scan capabilities and can be operated from very slow to extremely high scan rates and from scan angles approaching 180° to very small angles. Mirrors can be large, providing high resolution, and maximum attainable rates are restrained by structural considerations and by the speed at which facets deform from stress induced by centrifugal force.

System options for mechanical-type scanners can also be classified by what is moving relative to a fixed coordinate system: the focal point, the film, or both. If the film remains fixed while it is being scanned by a moving focal point, then a two-axis deflection system is required to scan through a "raster." Motion of the film alone does not apply to mirror scanner systems; but, one of the two axes of area scan can be provided by moving the film and the other by deflecting the focal point. This is usually referred to as a "line-scan" approach.

Very often raster scanning on a frame basis is accomplished with two scanners. They may be paired units or units of dissimilar types. A rotating polygon often is combined with a galvanometer or resonant scanner for this application, and self-resonant, galvanometer, and piezoelectric types can be used in pairs or in combination with each other.

Either oscillating or rotating mirrors can be used as line scanners in conjunction with either a precision film transport or a translating platen to provide the required motion along the second axis. Typical curved field and flat field systems are illustrated in Figure 8. The major difference between them is in the relative complexity of the optics and focal surface.

SOLID-STATE SCANNERS

The rapid development of arrays of discrete photodetector elements has brought about a variety of solid-state scanner systems. In these scanners, instead of mechanically or electronically scanning a single beam across the area of interest, the area is sampled in small, discrete adjacent areas by electronically switching between detectors in an array. Hence, arrays with a sufficient number of elements to cover the area of interest at the desired resolution allow scanning without any moving parts. Unfortunately, with the current state of technology in producing area arrays, this is true only for small areas at high resolution or larger areas at lower resolutions. Techniques for generating long scan lines by butting two or more linear arrays together have, however, been developed.

A solid-state image sensor consists of an integrated structure containing

- An array of sensing elements in which incident light is absorbed and converted to electric charge, and
- An array of storage elements (in one-to-one correspondence with the sensors) in which the charge is integrated and stored.
- A scanning circuit for readout of the stored charge.

Solid-state devices are available in two formats:

- Linear arrays containing up to 2048 detectors; and
- Two-dimensional, or area, arrays comprised of matrices of up to 380 by 488 detectors.

The sensor and storage elements may be diffused photodiodes or surface-depletion layers induced by a voltage applied to semi-transparent electrodes of a material such as polycrystalline silicon. The readout mechanism may be a digital shift register which controls a set of multiplex switches to empty sequentially the charge on the individual sensors onto a common output line, or it may be an analog shift register of the CCD or bucket brigade type. In the latter case, the sensors are emptied simultaneously into corresponding sites in the analog shift register and are then shifted sequentially to the output node. The basic building blocks can be combined in several ways to produce the various types of solid-state image sensors. Self-scanned photodiodes (SSPD), charge-coupled devices (CCD), charge injection devices (CID), and charge-coupled photodiodes (CCPD) will be discussed briefly.

The classical SSPD array utilizes photodiode sensors and digital shift register scanning. Its major advantages stem from the properties of the sensors, i.e., repeatability, high quantum efficiency, broad spectral response, and low dark current. They are also easily fabriacted in different shapes and sizes.

Conventional CCD arrays use surface depletion layers as detectors and a CCD analog shift register for readout. The charge, created by photo interaction, is stored in a potential well formed by modulating the voltages applied to a series of electrodes associated with the detectors. After the charge has been allowed to accumulate, it is collected by increasing the voltage on selected electrodes in order to create a deeper potential well under that electrode. If the electrodes are sufficiently close together, the charge will spill over into the new well, ef-

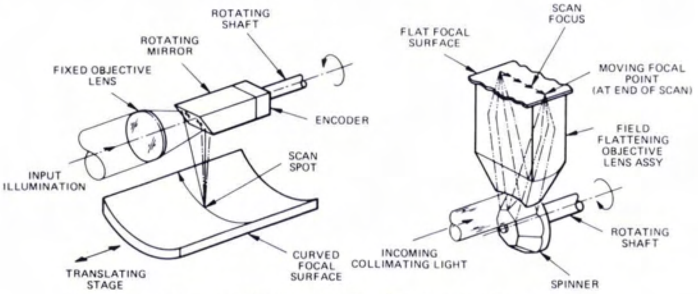

FIG. 8. Curved-field and flat-field scanning systems.

fecting a shift. Thus, by properly modulating three voltages, an optically generated charge can be collected and swept out as if it were stored in a shift register.

The CID's utilize field-induced surface-depletion layers as detectors and digital shift registers for scanning. Therefore, the essential difference between the CCD and the CID is the method of charge readout. In contrast to CCD's, in which the signal charge is transferred from the storage register sequentially to a readout amplifier at the edge of the array, the CID readout takes place at the image site by transferring charge from under one electrode to another at each imaging site.

The CCPD arrays use photodiodes as sensors and CCD analog shift registers for readout. The sensing region is a row of diffused photodiodes which operate in the integration mode. At the end of each integration period, the charge on the diodes is simultaneously dumped into one of the two CCD registers for readout. The output from the even register is delayed one-half sample period with respect to the odd register so that a full wave signal is obtained by multiplexing the two outputs off-chip.

Since linear solid-state photodetector arrays available today contain no more than 2048 detectors each, for many applications several arrays must be butted together to provide the required number of pixels per line. Because of the physical structure of an individual array (typically twice as long as the actual photosensitive area), multiple arrays cannot be placed close enough together to maintain the pixel spacing inherent in the individual arrays.

Figure 9 depicts two different optical butting approaches that have been used to produce linear scans composed of more elements than are available in a single commercially available array. The basic differences between the two approaches shown are in the focal plane assemblies and the quality of the imaging optics.

TECHNOLOGY CAPABILITIES VERSUS SCANNER REQUIREMENTS

Format accommodation, resolution, data rates, geometric accuracy, photometric accuracy, and dynamic range were identified earlier as the major performance criteria against which evaluation of different implementation technologies should be based. A hypothetical set of scanner requirements is presented in Table 1. The format accommodation and resolution capabilities of the different technologies are summarized in Table 2; the geometric accuracy, photometric accuracy, and data rate capabilities, in Table 3.

A major influence upon scanning system design is the need for format flexibility, both dimensionally and in resolution. Dimensionally, it is desirable to attain a full frame size of 230 by 230 mm and additionally be adaptable to perform a sub-raster or "window" mode over a substantial number of picture elements (pixels) in both directions. In resolution variability, it should allow adjustment of the scan spot size (the footprint) on the storage material over a 5:1 range of spot diameter to accommodate variations in input resolutions. Another major influence upon the scanning system selection is the

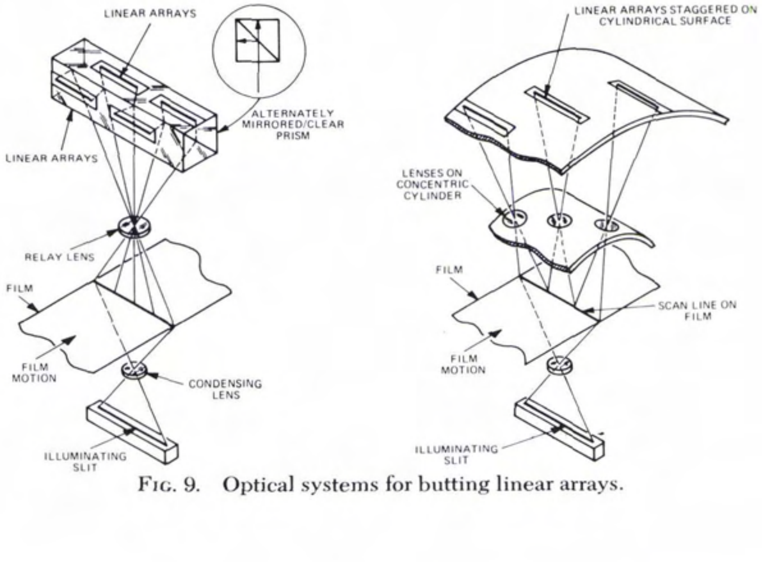

FIG. 9. Optical systems for butting linear arrays.

TABLE 1. HYPOTHETICAL SCANNER REQUIREMENTS

Format Accommodation	
Full format mode	Variable, up to 230 × 230 mm
Window mode	Variable, up to 2000 × 2000 pixels
Resolution	Variable, from 20 to 100 *l*p/mm in both modes
Scanning spot size	Variable, from 5 to 25 μm
Pixels per line (full format)	46,000 = 100 *l*p/mm 9,200 = 20 *l*p/mm
Lines per raster (full format)	No less than 9,200 to 46,000, as function of input resolution
Data Rates	At least 0.75 million pixels/sec, goal, 3.7 × 10^7 pixels/sec
Geometric Accuracy	0.001 to 0.002 percent
Dynamic Range	At least 200:1 (0.2-2.5 density units) (63.1-0.316% transmittance)
Photometric Accuracy	
6-bit quantization (min)	1 unit 64 = ±0.035D or ±0.98%T
8-bit desirable	1 unit in 256 = ±0.009D or ±0.25%T

need for relatively high resolution in terms of total number of elements per scan format. Interpreting this resolution from the point of view of inputs that may vary in resolution from 20 to 100 cycles/mm, represents a full format resolution requirement between 4,600 and 23,000 image cycles per scan.

Since valid digitizing may be executed with no less than two samples per information cycle, this raises the pixel count to between 9,200 and 46,000 per scan, depending upon the resolution of the input.

It is further known that the 2:1 sampling criterion is adequate only when the relative phase of the sampling interval is controlled with respect to the cyclic information. If the sampling occurs precisely at the peaks and at the troughs of the image cycles, than two samples per image cycle are adequate. If, however, the peaks and troughs of the image fields bear no maximally phased relationship with the sampling intervals, then all sampling conducted at times other than at the precise maximum and minimum points will be reduced in detected intensity, and will be nulled to zero when occurring at the midpoints between the peaks and the troughs. To guard against this real condition during periodic sampling of an arbitrary field, over-sampling (beyond the Nyquist criterion) is sometimes instituted.

The use of over-sampling imposes an extra demand upon the digital image processing techniques in terms of the volume of the data that must be handled. If modulation transfer losses attributed to the information phasing problem can be tolerated, the system designer would favor sampling at the Nyquist limit. With that in mind, the format and resolution comparisons are summarized in Table 2.

The data requirements imposed on a scanner are generally dictated by the type of interface involved. Typical disk systems such as the standard CDC-844 can accommodate transfer rates up to 6 × 10^6 bits/sec. Assuming density level encoding at eight bits per pixel sets an upper limit on the data rate at approximately 0.75 × 10^6 pixels/sec for this type of installation. However, special interfaces for mass memory modules, employing multiple disk systems, and array processors that can accommodate data rates on the order of several million pixels per second, have been developed for applications requiring extremely high transfer and processing rates. Consequently, scanners having high data rate capabilities would be attractive from a production point of view. Data rate comparisons are summarized in Table 3.

SUMMARY AND CONCLUSIONS

The various mapping applications are best accomplished with different operating modes. Some require scanning a full format (230 by 230 mm maximum area) whereas a smaller "window" (part of a full format area) scanning mode suffices for others. In some cases, an interactive capability would be beneficial; in others, batch processing is better. The critical requirements imposed on an image scanner for digital mapping applications are resolution (in total number of elements per viewing area), uniformity of performance over this area, geometric

TABLE 2. FORMAT ACCOMMODATION AND RESOLUTION CAPABILITIES OF DIFFERENT TECHNOLOGIES

Technology	Maximum Pixels/ Line	Maximum Window Scan At 100 *l*p/mm	Approximate Resolution At Full Format With Single Unit (*l*p/mm)	Units or Segments Req'd For Full Format Line Scan At 100 *l*p/mm	Comments
Electronic					
CRT	4000	20 mm × 20 mm	9	12	Adequate for window scanning applications in conjunction with precision translating stages. However, data rates at high resolutions are low.
Vidicon	2000	10 mm × 10 mm	4	23	
Image Dissector	4000	20 mm × 20 mm	9	12	
Electro-Optical					
Rotating Drum	46,000	Full Format	100	1	Window and full format capability Inefficient in window mode Rates relatively slow Window positioning inaccurate
Translating Flat Bed	46,000	Full Format	100	1	Window and full format capability Rates relatively slow
Oscillating Mirror	2000-10,000 (varies with mirror size and scan rate)	10 mm × 10 mm (2000 × 2000)	22 (10,000 pixels)	5	Window mode with translating stages Full format at low resolution and poor linearity
Rotating Mirrors	46,000	Full Format	100	1	Window and full format Inefficient in window mode
Solid State					
Linear Arrays	2000	10 mm × 10 mm	4	23	Window and full format at high data rates and with accurate positioning
Area Arrays		(500 × 500) 2.5 mm × 2.5 mm			Larger arrays expected by 1980 will satisfy window requirements

TABLE 3. GEOMETRIC ACCURACY, PHOTOMETRIC ACCURACY, AND DATA RATE CAPABILITIES

Technology	Geometric Accuracy	Photometric Accuracy	Data Rates (Pixels/Sec)	Comments
Electronic				
CRT	0.05%	0.02 D	5×10^6	With distortion correction 4000-5000 pixels/line, max.
Vidicon	0.2%	0.02 D	8×10^6	With shading correction module
Dissector	1-2%	0.02 D	1×10^5	Non-constant spiral distortion.
Electro-Optical				
Rotating Drum	0.002%	<0.01 D	1.5×10^5	
Flat Bed	0.002%	<0.01 D	4×10^4	
Oscillating Mirror	0.01%	<0.01 D	1×10^6	With reference grating limited to 10,000 pixels/scan
Rotating Mirror	0.002%	<0.01 D	1×10^8	
Solid State				
Linear Arrays	0.002%	<0.01 D	9.2×10^8	Several optically butted arrays in parallel
Area Arrays	0.1 μm	<0.01 D	5×10^6	Over single array

accuracy, and speed. Systems adaptable to all these requirements include drumtype laser scanners, rotating-mirror laser scanners, and solid-state scanners comprised of a series of optically butted linear arrays. In all cases, careful design and implementation are essential. The rotating drum and mirror approaches are inefficient in the window mode because of their duty cycle, whereas the solid-state approach is equally efficient in both the full format and window modes.

Even the highest performance electron-beam systems are not capable of covering the full format with the requisite number of resolution elements at sufficiently high contrast and detectability to allow adequate dynamic range and scan linearity. The montaging of strips or areas of sub-rasters to allow the use of such systems is extremely unattractive because of the critical edge-matching requirements to achieve continuity with accuracy and because of the bulkiness of a multi-unit configuration.

If different scanners are planned for each operating mode, then oscillating mirror technology, in conjunction with precision positioning stages, can be adapted to satisfy a "window only mode." Some of the electronic scanners can also be adapted to the "window only mode" if geometric and photometric accuracy requirements are relaxed.

The flat-bed microdensitometer meets or exceeds all of the requirements outlined in Table 1 except data rate. Mechanical considerations usually limit the maximum scanning velocities attainable and use of a flat-bed scanner would be more appropriate to situations where the system data rate is limited by the computer or the mass-storage peripherals.

It is noted that most of the scanning technologies discussed in this paper have a relatively long history, and scanner systems using these represent near maximum or optimum refinement. Solid-state sensor array technology, however, is relatively new and will very likely see significant improvement in the coming years. Certainly, the relative infancy of solid-state sensor array technology and the rapid rate at which refinements are being introduced in terms of number of elements per array, element size and spacing, and noise characteristics strongly suggest that these capabilities and associated implementation simplicity will surpass other alternatives for most scanning applications in the very near future.

The operating environment intended for the scanner, i.e., production or research and development, also significantly influences the requirements imposed on it. Consequently, it is concluded that the application scenario and intended environment must be known and resulting requirements must be carefully evaluated and ranked before the most appropriate technology can be selected and a system design recommended.

ACKNOWLEDGMENTS

This survey of image scanning technology was performed at the request of the U.S. Army Engineer Topographic Laboratories, Ft. Belvoir, Va., and reported in ETL-0137, *Imaging Scanner Technology Study*, John Montuori, Perkin-Elmer, March 1978. The author wishes to thank Roger J. Arguello, Leo Beiser, Howard Burg, Lawrence W. Cassidy, and Richard Labinger for their assistance.

References

1. Crombie, M. A., and L. A. Gambino, *Digital Stereo Photogrammetry,* prepared for the Congress of International Federation of Surveyors, Commission V., Stockholm, Sweden, June 1977.
2. Irvin, M. M., *Survey of Digital Image Scanning Systems,* The Aerospace Corporation, Los Angeles, California, June 1976.
3. Chien and Snyder, Hardware for Visual Image Processing, *IEEE Transactions On Circuits and Systems,* Volume CAS-22, No. 6, June 1975.
4. *Camera Tubes,* RCS Review, Vol. 36, September 1975.
5. Palermo, C. J., R. M. Montgomery, and E. N. Young, Jr., *Applications of Acousto-Optics to Laser Recording,* Harris Electronics Systems Division, Melbourne, Fla. August 1974.
6. Reich, S., The Use of Electro-Mechanical Mirror Scanning Device, *Laser Scanning Components and Techniques,* SPIE, Vol. 84, 1976.
7. Zook, J. D., Light Beam Deflector Performance. A Comparative Analysis, *Applied Optics,* Vol. 13, No. 4, April 1974.
8. Beiser, L., Laser Scanning Systems, *Laser Applications,* Vol. 2, edited by M. Ross, Academic Press, New York, 1974.
9. Snow, E. N., and G. P. Weckler, Self-Scanned Charge Coupled Photodiode (CCPD) Sensor Arrays, *Solid State Image Devices,* SPIE Vol. 116, 1977.
10. *A Survey of Image Dissector Performance Characteristics,* Technical Note 112, Electro-Optical Products Division, ITT, Fort Wayne, Indiana.
11. Billingsley, F. C., *Image Processing Hardware for Electron Microscopy: II. A Digital System,* Jet Propulsion Laboratory, California Institute of Technology, Pasadena, California.
12. *RCA, Electro-Optics Handbook,* RCA Commercial Engineering, Harrison, New Jersey.
13. *Publication E-116,* Electro-Optical Products Division, ITT, Fort Wayne, Indiana (Revised Aug. 1973).
14. Bryant, M., *Digital Image Processing,* Optronics International Inc., Chelmsford, Massachusetts.
15. Beiser, L., Opto Mechanisms for Wide Band Laser Scanning, *Proceedings of the Technical Program, Electro-Optical Systems Design Conference,* 1972.
16. Yellin, Dr. M., Scanners and Recorders for Imagery Transmission, *Proceedings 16th Annual Technical Meeting,* SPIE, 1972.
17. Fowler, V. J., Laser Scanning Techniques, *Proceedings of SPIE Symposium on Laser Recording,* Vol. 53, Aug 21-22, 1974.
18. Gamenopoulos, N., and E. D. Hartfield, Advanced Laser Image Recorder, *Applied Optics,* Vol. 11, No. 12, December 1972.

(Received 16 March 1979; accepted 6 July 1979; revised 30 August 1979)

CIS Convention '80 "Western Heritage"

Regina, Saskatchewan, Canada
30 April, 1-2 May 1980

Sponsored by the Canadian Institute of Surveying, the Convention will feature the following topics:

- History of the Western D.L.S. Survey System and its preservation today.
- Changing methods of surveying in the West.
- Advances in geodesy and control surveys.
- Resource Development—potash, coal, and uranium.
- Hydrographic surveys on the prairies.
- Future Developments in Western Canada.

For further information please contact

C.I.S. Convention Committee
P.O. Box 4320
Regina, Sask. S4P 3W6
Canada