A Simulation Study on Point Determination Using MOMS-02/D2 Imagery*

Heinrich Ebner, Wolfgang Kornus, and *Günter Strunz*
Chair for Photogrammetry, Technical University of Munich, Arcisstrasse 21, D-8000 Munich 2, Federal Republic of Germany
Otto Hofmann and *Franz Müller*
Messerschmitt-Bölkow-Blohm GmbH, P.B. 801149, D-8000 Munich 80, Federal Republic of Germany

ABSTRACT: In the course of the second German Spacelab mission D2, which is scheduled for launch in 1992, the MOMS-02 camera is intended to acquire digital threefold stereo imagery of the Earth's surface from space.

Extensive simulations were performed in order to examine the influence of various arrangements of the three sensor lines in the focal plane of the camera, the precision of observed exterior orientation parameters, the distance between the so-called orientation images, and the number and distribution of ground control points on the resulting accuracy of point determination. Further investigations were carried out into the use of a given Digital Terrain Model as control information. The simulations are based on a bundle adjustment modified for the processing of three-line imagery.

The mathematical model used for the computations is briefly described. The project parameters of the simulations are outlined and the main results are given, based on the theoretical standard deviations of the object point coordinates. Finally, some conclusions are drawn from the results of the study.

INTRODUCTION

MOMS-02/D2 IS AN EXPERIMENTAL PROJECT for digital mapping from space, which is funded by the German Federal Minister for Research and Technology (BMFT). In the course of the second German Spacelab mission D2, which is scheduled for launch in 1992, the MOMS-02 camera is intended to acquire digital imagery of the Earth's surface (Ackermann *et al.*, 1990).

The special characteristic of the MOMS-02 camera is the combination of high resolution panchromatic images for three-dimensional geometric information with multispectral images for thematic information. In order to meet the requirements of different users, a modular optical concept based on a system with five lenses was chosen. The multispectral data acquisiton will be performed by two lenses which allow for recording of a maximum of four spectral channels. The stereo module basically consists of three lenses with one CCD line sensor each, which provide a forward-, a downward-, and a backward-looking view. The central lens enables high quality image recordings with a ground pixel resolution of about 5 by 5 m^2. From the photogrammetric point of view, the aims of the mission are mainly the production of high quality maps, the acquisition of digital data for geographic databases and information systems, and the generation of Digital Terrain Models (DTM) with an accuracy of 5 m or better. Moreover, the concept for completely digital photogrammetric data acquisition and evaluation is to be developed, realized at an experimental level, and tested.

Simulations based on the MOMS-02 camera specifications and the D2 mission parameters were performed in order to obtain a survey of the attainable geometric accuracy and to give recommendations in the planning phase of the project concerning additional measurements during the mission and the technical design of the camera. The simulation study was ordered by the BMFT under contract No. 01 QS 88170, and the simulations were performed at the German aerospace company Messerschmitt-Bölkow-Blohm GmbH and the Chair for Photogrammetry of the Technical University of Munich.

In this paper the principle of photogrammetric point determination using digital data of three-line scanner systems is shortly reviewed. Then the simulation parameters are described and important results of the study and of additional simulations, performed by the Chair for Photogrammetry, are given. Finally, the results are discussed and conclusions are drawn from the study.

PHOTOGRAMMETRIC POINT DETERMINATION USING THREE-LINE IMAGERY

The mathematical model for point determination using three-line imagery is based on the concept proposed by Hofmann *et al.* (1984). A detailed description of the model can be found, for example, in Hofmann (1986), Ebner and Müller (1987), and Hofmann and Müller (1988). For reasons of clarity, the basic principle will be shortly reviewed.

A three-line opto-electronic scanner system consists of three linear CCD sensors, which are arranged perpendicular to the direction of flight in the focal plane(s) of one or more lenses. During the flight the sensors continuously scan the terrain and the data are read out at a constant frequency. This dynamic mode of image recording results in a large number of successive images, each consisting of three lines (Figure 1).

For the photogrammetric evaluation of these data, corresponding points have to be determined. This task will preferably be accomplished, or at least supported, by digital image matching techniques (Heipke *et al.*, 1990). The simultaneous determination of object points and reconstruction of the exterior orientation of the three-line imagery is based on the principle of bundle adjustment. The exterior orientation, however, is calculated only for so-called orientation images, which are introduced at certain time intervals. In between, the parameters of every image are expressed as functions (e.g., linear interpolation functions) of the parameters of the neighboring orientation images.

SIMULATION STUDY

SIMULATION PARAMETERS

The simulations are based on system parameters which match to a large extent the specifications of the MOMS-02 camera and the flight parameters of the mission (see Table 1 and Figure 2).

Unlike the stereo module of the MOMS-02 camera, which consists of three lenses with one sensor line each, a one-lens camera

---

*Modified version of a paper presented at the ISPRS Commission I Symposium in Manaus 1990 and published in the *International Archives of Photogrammetry and Remote Sensing*, Vol. 28, Part 1, pp. 21–29.

PHOTOGRAMMETRIC ENGINEERING & REMOTE SENSING,
Vol. 57, No. 10, October 1991, pp. 1315–1320.

0099-1112/91/5710–1315$03.00/0

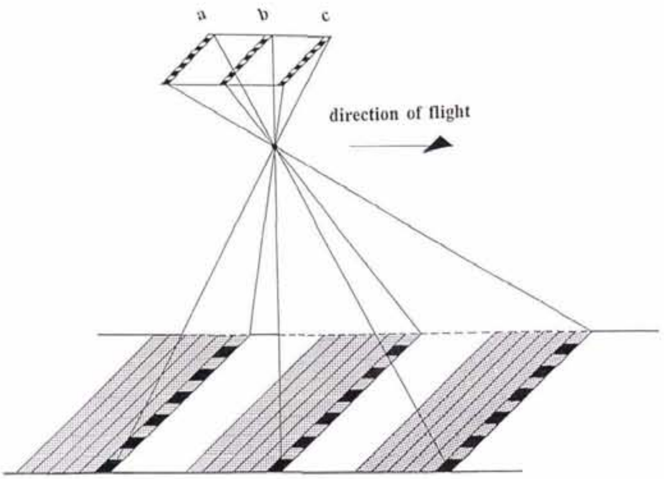

FIG. 1. Image recording using a three-line scanner.

was used in the simulations. A straight forward flight path with attitude parameters of the camera equal to 0 grad is assumed.

The following regular arrangement of the object points is used:

- distance of points along flight direction: 2 km,
- distance of points across flight direction: 9 km,
- height of all object points: 0 m.

The total number of object points is 1520. They are arranged in five chains in the direction of flight with 304 points each. The points at the beginning and the end of the strip are projected into two images only, whereas every point at the central part of the strip, i.e., every point that is at a distance of one baselength or more from the beginning and the end of the strip, is projected into three images. The object coordinate system is defined as a right handed Cartesian system XYZ, with the positive direction of the X axis parallel to the direction of flight.

A peculiarity of the MOMS-02 configuration is the extremely small image angle, which results in an unfavorable ratio between the strip width and the flying height of approximately 1:9. For point determination using three-line imagery, only control information for the definition of the datum is in principle necessary for rigorous object reconstruction. The above mentioned configuration, however, leads to rather poor accuracy. Consequently, observations of the exterior orientation parameters have to be considered in the evaluation process.

In order to obtain estimations of the achievable accuracy, the simulations are performed with variable parameters, which are described in the following:

(a)Arrangement of the sensor lines in the focal plane:

- parallel sensor lines,
- convergent sensor lines ($\alpha \approx 14$ grad).

Because preceding theoretical considerations (Hofmann, 1986) pointed out that the geometric accuracy of point determination using three-line imagery can be improved if the outer sensor lines are not parallel to the central line (Figure 3), the influence of the arrangement of the senor lines on the resulting accuracy is investigated.

(b)Observations of the orientation parameters of the images:

- no camera orientation data available,
- standard deviations of position parameters: 0 (error-free), 2, 5, 10, 25 m,
- standard deviations of attitude parameters: 0 (error-free), 1, 2, 5, 10 mgrad.

TABLE 1. CAMERA AND FLIGHT PARAMETERS OF THE SIMULATION

calibrated focal length:	f = 660 mm
convergence angle:	γ = 27.1933 grad
distance of two sensor lines:	s = 300.418 mm
ground pixel resolution:	5 by 5 m^2
flying height above ground:	H = 334 km
base length:	B = 152 km
strip width:	W = 36 km
strip length:	L = 606 km

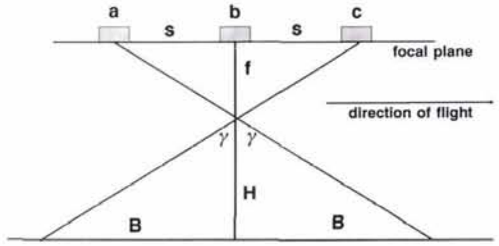

FIG. 2. Camera and flight parameters of the simulation.

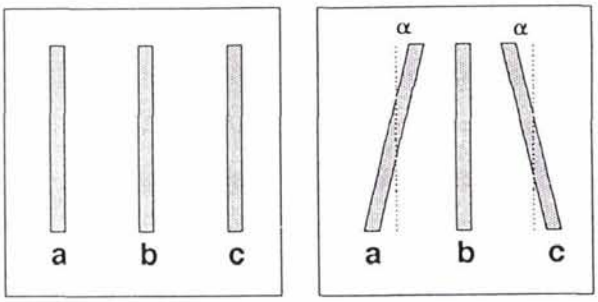

FIG. 3. Arrangement of the sensor lines in the focal plane.

In connection with MOMS-02 imagery, information about the parameters of the exterior orientation is of special interest. It will probably be derived from on-board navigation systems, from tracking data recorded during the space mission and from orbit models. The functional and stochastic models for tying these data in a combined adjustment have to be defined when the data are at hand. The simulations are performed with the simplified assumption that camera orientation data are given as observations for position and attitude of every orientation image. The data are treated as being uncorrelated, assuming various levels of precision.

(c)Distances between the orientation images:

- 8.11 km (approx. 1 sec. flight time),
- 15.60 km (approx. 2 sec. flight time),
- 28.95 km (approx. 4 sec. flight time).

When navigation data or orbit models of the D2 mission are available, the temporal position and attitude variations of the shuttle have to be analyzed. From these, a time interval has to be derived on condition that during this interval the camera orientation parameters are optimally approximated by the interpolation function, which is defined in the mathematical model. As no practical data are yet available, the values given above are used. The range they cover is expected to be realistic for the mission. In the simulations a linear interpolation function between the orientation images is assumed.

(d)Number of ground control points:

- 4 XYZ control points (distance between control points: 302 km),

- 10 *XYZ* control points (distance between control points: 76 km),
- 18 *XYZ* control points (distance between control points: 38 km),
- 34 *XYZ* control points (distance between control points: 19 km).

The control points are arranged in the threefold covered area of the strip. Their coordinates are treated as error-free. Different numbers of available ground control points are assumed and the effect on the accuracy of point determination is investigated. *(e)DTM as control information:*

- no DTM information available,
- standard deviation of DTM: 20, 50, 100 m.

Additionally to or instead of control points, a given DTM can be used in the adjustment as general ground control information. This information might originate, e.g., from a height database or from digitized contours of existing maps. The mathematical model for using DTM information in a bundle block adjustment has been described in Ebner and Strunz (1988). In the simulations different height precision levels of the DTM are assumed.

Estimation of the Theoretical Accuracy

Based on the described simulation model, the image coordinates of all object points are generated. Then least-squares adjustments are performed according to the generalized model of bundle adjustment for three-line imagery.

The theoretical accuracy of the estimated parameters is described by their covariance matrix, which is composed of the cofactor matrix and the *a posteriori* estimate of the reference variance ($\hat{\sigma}_o^2$). The cofactor matrix of the parameters is obtained from the inversion of the normal equation matrix, whereas the estimate of the reference variance can be computed from the observation residuals and the *a priori* weight matrix of the observations. Because the simulations are performed with generated error-free observations, the *a priori* σ_o^2 is used instead of $\hat{\sigma}_o^2$. This means that the accuracy estimates are valid for the *a priori* assumed precision of the observations. The *a priori* σ_0 is chosen as equal to the standard deviations of the image coordinates.

For all computations of the simulation study, standard deviations of the image coordinates of $\sigma_0 = 5$ μm are assumed. This accuracy of the image coordinates is mainly influenced by the precision of the image matching process and the effect of remaining interpolation errors. Interpolation errors are due to the approximation of the real variations of the postion and attitude parameters by an interpolation function between neighboring orientation images. By adapting the distance between the orientation images to the flight characteristics, these errors have to be kept small.

Results

For the assessment of the theoretical accuracy of a particular simulation version, the individual standard deviations $\sigma_{\hat{X}_i}$, $\sigma_{\hat{Y}_i}$, $\sigma_{\hat{Z}_i}$ of the estimated object point coordinates $\hat{X}_i$, $\hat{Y}_i$, $\hat{Z}_i$ are analyzed. Because of the large number of simulations, only the most important results will be presented in this paper.

First, the theoretical accuracy limits for the used configuration are given. These values are achieved if the parameters of the exterior orientation of all images are treated as error-free observations in the adjustment. This means that solely the geometric constellation of the intersection of the image rays and the precision of the image coordinates define the accuracy of the point determination. In Figure 4 the accuracy limits for the heights of the object points are shown.

The theoretical standard deviations $\sigma_{\hat{Z}_i}$ obtained from simulation runs with parallel (Figure 5) and convergent (Figure 6) arrangement of the sensor lines, assuming a precision of position parameters of 10 m and of attitude parameters of 5 mgrad, are given next.

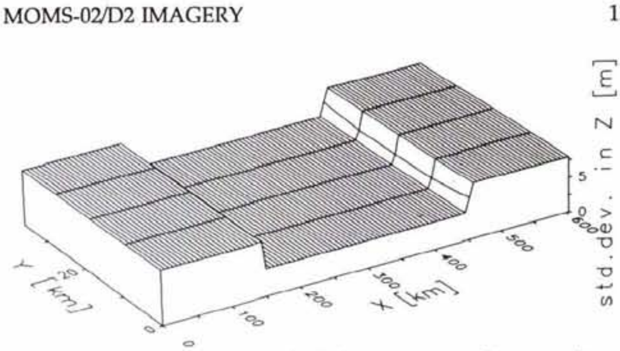

FIG. 4. Theoretical standard deviations $\sigma_{\hat{Z}_i}$ assuming error-free observations of the exterior orientation parameters (accuracy limits), parallel sensor lines.

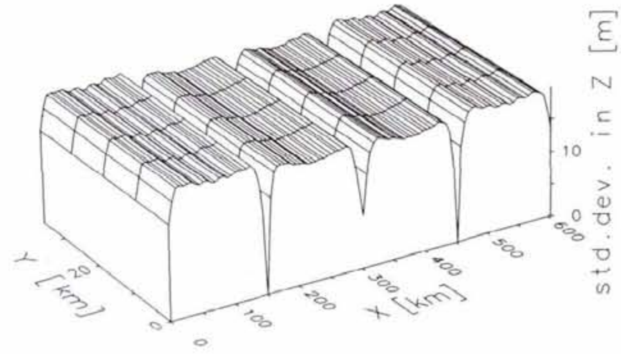

FIG. 5. Theoretical standard deviations $\sigma_{\hat{Z}_i}$ assuming observed orientation parameters (standard deviations 10m/5mgrad), four ground control points, distance between orientation images: 8 km, parallel sensor lines

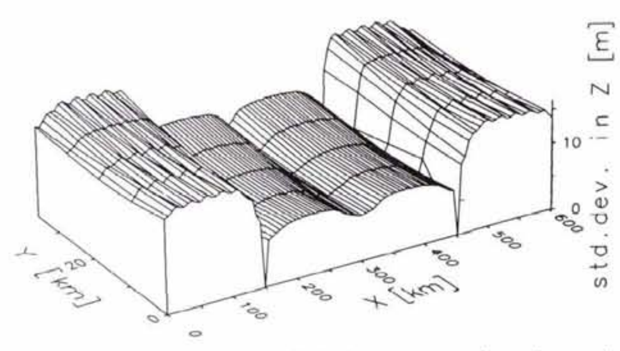

FIG. 6. Theoretical standard deviations $\sigma_{\hat{Z}_i}$ assuming observed orientation parameters (standard deviations 10m/5mgrad), four ground control points, distance between orientation images: 8 km, convergent sensor lines

Note: In Figures 4 through 6 the values $\sigma_{\hat{Z}_i}$ of three successive points in the direction of the *X*-axis are averaged and the strip width is enlarged by a factor of 10 compared to the strip length to make the graphic representations clearer.

In order to present the results of the different computation versions in a compact form the root-mean-square (RMS) values $\mu_{\hat{X}}$, $\mu_{\hat{Y}}$, $\mu_{\hat{Z}}$ of the theoretical standard deviations of all points, which are projected into three images, are calculated. Using these values, summarized accuracy measures for the respective simulation version can be given. In Figures 7 through 10 these RMS values are shown graphically.

The following abbreviations are used in Figures 7 through 10:

- *par., conv.*: parallel or convergent arrangement of the sensor lines.

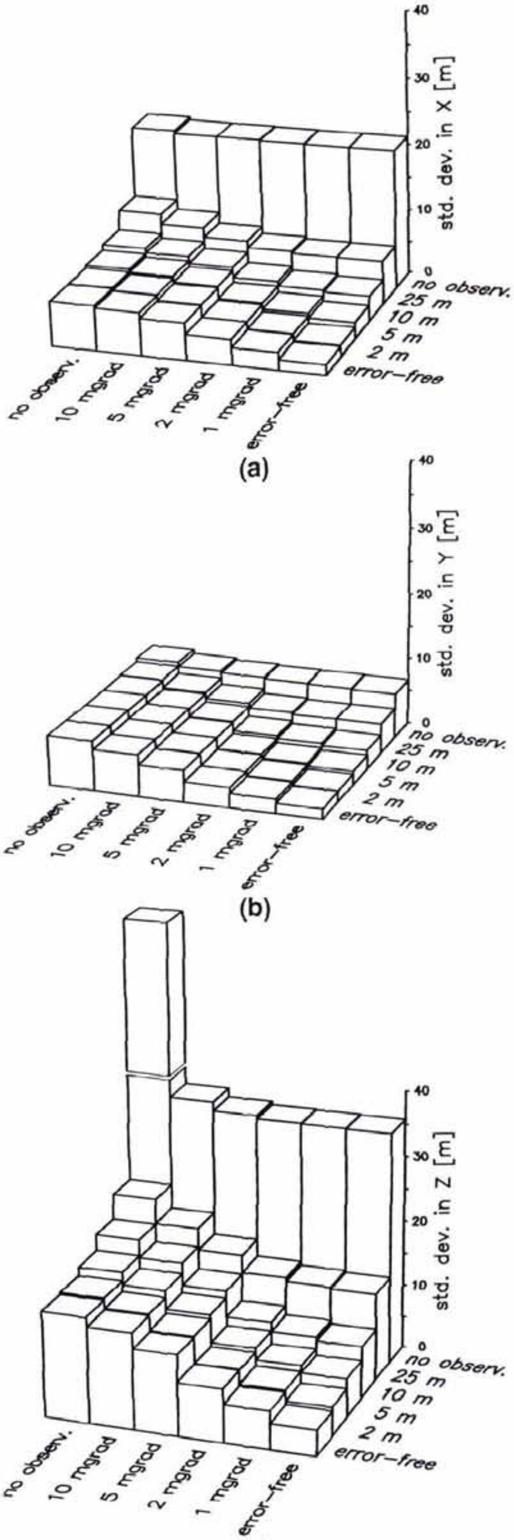

FIG. 7. (a) RMS values $\mu_{\hat{X}}$ of the theoretical standard deviations $\sigma_{\hat{X}_i}$ assuming four ground control points, distance between orientation images: 16 km, parallel sensor lines. (b) RMS values $\mu_{\hat{Y}}$ of the theoretical standard deviations $\sigma_{\hat{Y}_i}$ assuming four ground control points, distance between orientation images: 16 km, parallel sensor lines. (c) RMS values $\mu_{\hat{Z}}$ of the theoretical standard deviations $\sigma_{\hat{Z}_i}$ assuming four ground control points, distance between orientation images: 16 km, parallel sensor lines.

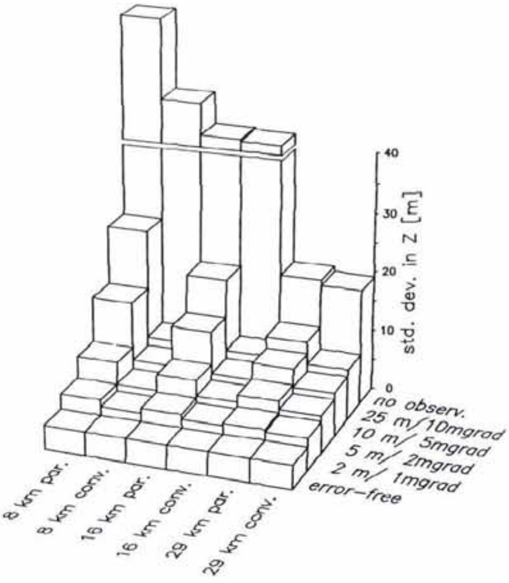

FIG. 8. RMS values $\mu_{\hat{Z}}$ of the theoretical standard deviations $\sigma_{\hat{Z}_i}$ assuming four ground control points.

- *8km, 16km, 29km:* distances between orientation images.
- *error-free, 2m/1mgrad, ..., 25m/10mgrad:* standard deviations of observed orientation parameters.
- *no observ.:* no observations for the orientation parameters available.
- *4 GCP, 10 GCP, 18 GCP, 34 GCP:* number of XYZ ground control points.
- *DTM 20 m, DTM 50m, DTM 100m:* standard deviations of the DTM used as control information.

Breaks in the graphic representations mean that the respective values are not given true to scale.

In Figures 7a through 7c the influence of different precision levels for the observations of the position and attitude parameters of the orientation images on the resulting RMS values $\mu_{\hat{X}}$, $\mu_{\hat{Y}}$, $\mu_{\hat{Z}}$ is shown.

In Figures 8 through 10 only the RMS values $\mu_{\hat{Z}}$ are given.

The effect of different distances between the orientation images (Figure 8) and the influence of the number of ground control points (Figure 9) for parallel and convergent arrangements of the sensor lines are presented next.

In Figure 10 the influence of different precision levels of a given DTM used as control information on the resulting RMS values $\mu_{\hat{Z}}$ is shown.

DISCUSSION OF RESULTS

THEORETICAL ACCURACY LIMITS OF THE OBJECT POINTS

The following RMS values for the theoretical accuracy limits of the object point coordinates are obtained from the simulations. For points which are projected into three images, these values are

$$\mu_{\hat{X}} = 1.5 \text{ m}, \mu_{\hat{Y}} = 1.5 \text{ m}, \mu_{\hat{Z}} = 3.9 \text{ m},$$

and for points projected into two images, these values are

$$\mu_{\hat{X}} = 2.5 \text{ m}, \mu_{\hat{Y}} = 1.8 \text{ m}, \mu_{\hat{Z}} = 7.9 \text{ m}.$$

In the graphic representation of the theoretical standard deviations $\sigma_{\hat{Z}_i}$ in Figure 4, the difference between points which are projected into two and three images is clearly visible. These values show that only points in the threefold covered area satisfy the accuracy demands of the mission. Therefore, in the

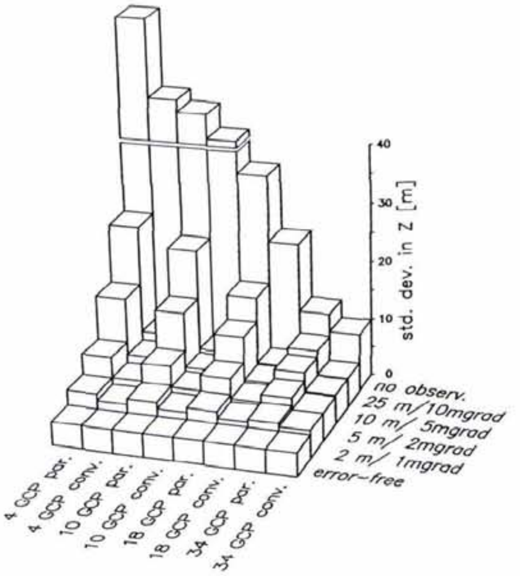

FIG. 9. RMS values μ_Z of the theoretical standard deviations σ_{Z_i} assuming distance between orientation images: 8 km.

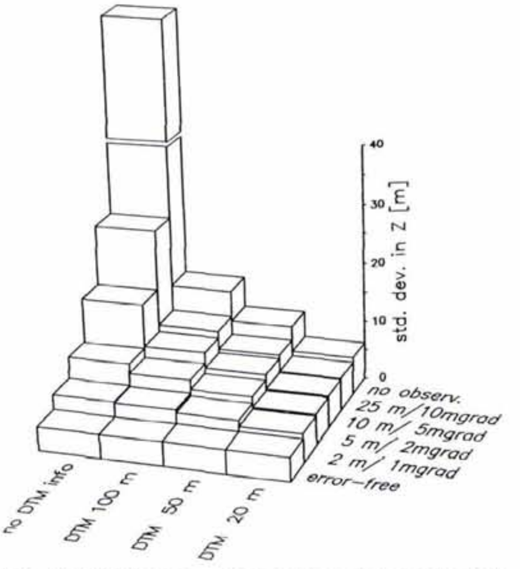

FIG. 10. RMS values μ_Z of the theoretical standard deviations σ_{Z_i} assuming four ground control points, distance between orientation images: 8 km, parallel sensor lines.

following discussion mainly the resulting accuracies of these points are reflected.

INFLUENCE OF THE SENSOR ARRANGEMENT

Comparing Figure 5 with Figure 6, it can be seen that the standard deviations σ_{Z_i} of all object points are smaller if convergent lines are assumed. The accuracies for points which are projected into three images are, in the case of parallel lines, only slightly better and in the case of convergent lines significantly better than the accuracies for points projected into two images. This effect appears especially in connection with inaccurate observations of the exterior orientation parameters. A review of the influence of the sensor arrangement on the photogrammetric point determination is given by Figures 8 and 9. For all distances between orientation images and for all versions of ground control points used in the simulations, a distinct improvement in accuracy is visible if convergent sensor lines are used. The ratio between the standard deviations resulting from parallel and from convergent lines becomes better in the case of convergent lines the less precisely the observations for exterior orientation parameters are given, the shorter the distances between orientation images are assumed, and the fewer ground control points are used.

Convergent lines on the ground can either be obtained by the convergent arrangement of the sensor lines or by inclining the shuttle across the direction of flight during the image recording. The roll angle, ω, which corresponds to a sensor rotation α, results from the formula

$$\sin(\omega) = \tan(\alpha) / \tan(\gamma)$$

where γ denotes the convergence angle. From this formula a sensor rotation of 14 grad corresponds to a roll angle of 33 grad. Additional simulations were performed which resulted in no perceptible differences between an instrumental line convergency and the inclination of the shuttle in the RMS values μ_X and μ_Z and in a deterioration in μ_Y by a factor of 2.

INFLUENCE OF OBSERVATIONS FOR EXTERIOR ORIENTATION PARAMETERS

The question, how precisely the parameters of the exterior orientation have to be measured in order to fulfill the accuracy demands, is of particular importance. Figures 7a to 7c show that the resulting accuracies improve with better precision of the position and attitude observations. If no observations are at hand, the results are unsatisfactory. In particular, observations for the positions are important, because insufficient accuracies are to be expected even in the case of error-free attitude observations (Figures 7a and 7c). For the accuracy of the Y-coordinates (Figure 7b), that effect is less apparent.

The simulations were performed with idealized assumptions for the camera orientation data. In practice, the data may be given with systematic offset or drift errors, e.g., as if originating from an inertial navigation system. A simple approach to model that effect is a simultaneous determination of additonal unknowns for offset and linear drift of the corresponding orientation data in the adjustment. This approach allows for the introduction of relative observations of the exterior orientation parameters. However, sufficient ground control information is necessary to determine these additional unknowns.

INFLUENCE OF THE DISTANCE BETWEEN ORIENTATION IMAGES

It can be seen in Figure 8 that the results become better with increasing distances between orientation images, assuming a constant σ_0. The increase of the distance between orientation images, however, leads to higher interpolation errors. As mentioned already, the appropriate distance can only be chosen when practical data are available.

INFLUENCE OF GROUND CONTROL INFORMATION

From Figure 9 it can be seen that an increasing number of ground control points results in a better accuracy of point determination. But only in the case of a dense network of ground control points can one do without precise exterior orientation observations, if the accuracy demands of the mission are to be fulfilled. As the availability of a large number of ground control points can not be ensured, a given DTM might be used as additional ground control information. Figure 10 shows a significant improvement of the resulting RMS values of the standard deviations σ_{Z_i}, even when a DTM with low precision is introduced into the adjustment. If no observations of the exterior orientation parameters are available, sufficient height accuracy is achieved by DTM information with a precision level of 20 m or better.

CONCLUSIONS

From the photogrammetric point of view, the major aim of the MOMS-02/D2 project is three-dimensional point determination and DTM generation with high geometric quality. Based on the results of this study, the following conclusions can be drawn. The simulations showed that a convergent arrangement of the sensor lines results in significantly better accuracies than does a parallel arrangement. However, because parallel sensor lines will be used for the mission, an improvement in accuracy can be achieved by inclining the shuttle during data recording. Precise observations of the exterior orientation parameters are required in order to fulfill the accuracy demands of the mission. Therefore, these data, which will be derived from on-board navigation systems, from tracking data, and from orbit models, have to be introduced into the photogrammetric adjustment. The exclusive use of ground control points is not recommended, because a dense network of control points would be required. The combination of ground control points with observations of the exterior orientation parameters and possibly ground control information from DTM should be used in a combined adjustment of photogrammetric and non-photogrammetric data.

REFERENCES

Ackermann, F., J. Bodechtel, F. Lanzl, D. Meissner, P. Seige, and H. Winkenbach, 1990. MOMS-02—A Multispectral Stereo Imager for the Second German Spacelab Mission D2, *International Archives of Photogrammetry and Remote Sensing*, Vol. 28, Part 1, pp. 110–116.

Ebner, H., and F. Müller, 1987. Processing of Digital Three-Line Imagery Using a Generalized Model for Combined Point Determination, *Photogrammetria*, Vol. 41, No. 3, pp. 173–182.

Ebner, H., and G. Strunz, 1988. Combined Point Determination Using Digital Terrain Models as Control Information, *International Archives of Photogrammetry and Remote Sensing*, Vol. 27, Part B11, pp. III/578–III/587.

Heipke, C., W. Kornus, R. Gill, and M. Lehner, 1990. Mapping Technology Based on 3-Line-Camera Imagery, *International Archives of Photogrammetry and Remote Sensing*, Vol. 28, Part IV, pp. 314–323.

Hofmann, O., 1986. Dynamische Photogrammetrie, *Bildmessung und Luftbildwesen*, Vol. 54, No. 3, pp. 105–121.

Hofmann, O., and F. Müller, 1988. Combined Point Determination Using Digital Data of Three Line Scanner Systems, *International Archives of Photogrammetry and Remote Sensing*, Vol. 27, Part B11, pp. III/567–III/577.

Hofmann, O., P. Navé, and H. Ebner, 1984. DPS–A Digital Photogrammetric System for Producing Digital Elevation Models and Orthophotos by Means of Linear Array Scanner Imagery, *Photogrammetric Engineering & Remote Sensing*, Vol. 50, No. 8, pp. 1135–1142.

(Received 17 December 1990; accepted 9 January 1991)
